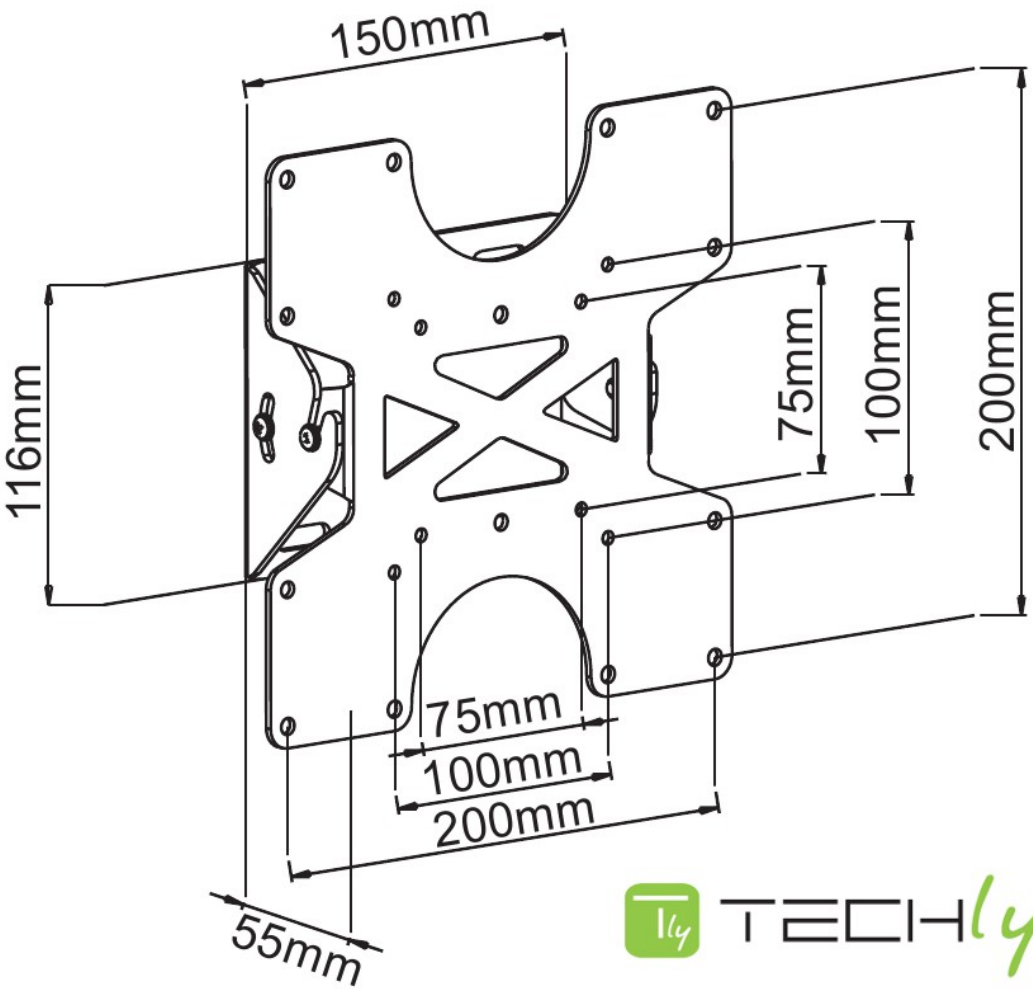

TECHly®